WBXL / WBXL-F

CARATTERISTICHE - SPECIFICATIONS

			WBXL	WBXL-F
IN	DIAMETER	Ø	3/8 BSP	3/8 BSP
	PRESS.	Min.	- 0.1 bar - 1.5 PSI	1 bar 15 PSI
		Max.	6 bar 87 PSI	6 bar 87 PSI
	TEMP.	Max.	60° C. 140° F.	
OUT	DIAMETER	Ø	3/8 BSP	
SHAFT		Ø	24 mm	
OIL		SAE 75W 90	0.5 litri 0.13 U.S.G.	
PESO WEIGHT		Kg / lbs	6 / 13.2	

pag.9

R Dx Bz B

OPTIONAL Sx F

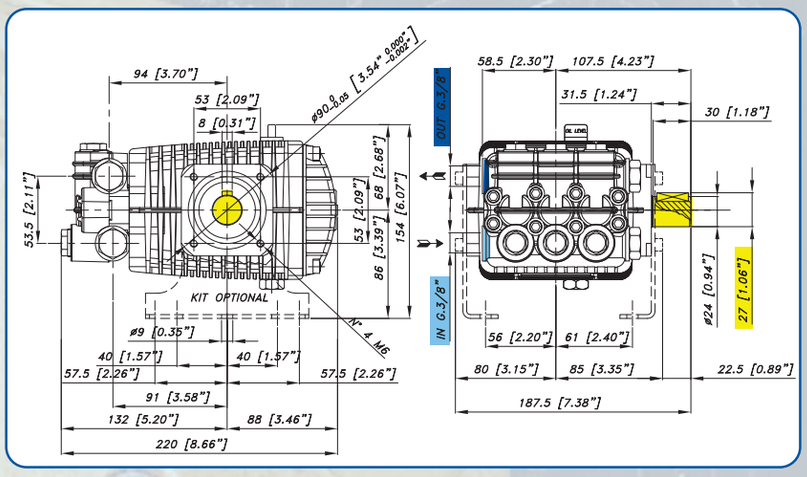

PIEDINI cod. 02.9829.97.3 (optional)
MOUNTING RAILS KIT cod. 02.9829.97.3 (optional)
KIT SUPPORTS cod. 02.9829.97.3 (option)
JUEGO DE PIES cod. 02.9829.97.3 (opción)

CARATTERISTICHE - FEATURES / PERFORMANCE CHART

CODICE *CODE*	MODELLO *MODEL*	PRESS MAX / MAX PRESSURE Bar	*PSI*	PORTATA / FLOW L/min	*GPM*	POTENZA / POWER KW	*HP*	PIST. *PLUNG.* Dia. mm	CORSA *STROKE* mm
WBXL 1450 rpm									
02.6013.97.3	WBXL 1316	160	2300	13	3.4	4.0	5,4	18	12.4
02.6014.97.3	WBXL 1320	200	2900	13	3.4	5.0	6.6		
WBXL-F 2800 rpm									
02.6030.97.3	WBXL 1317-F	170	2400	13	3.4	4.0	5.4	15	9.2
02.6031.97.3	WBXL 1320-F	200	2900	13	3.4	4.8	6.4		
02.6033.97.3	WBXL 1416-F	160	2300	14	3.7	4.1	5.6	15	10
02.6034.97.3	WBXL 1420-F	200	2900	14	3.7	5.2	7.0		

BERTOLINI pumps